A785, 150°C, Hybrid Polymer V-Chip, Low ESR, AEC-Q200

Overview

KEMET's A785 is a surface mount conductive polymer hybrid capacitor with outstanding electrical performance. The A785 winding is housed in a cylindrical aluminum can with a high/quality rubber deck. Low ESR is conditioned by a highly conductive polymer (PEDOT/PSS). The polymer system creates an electrical pathway between the anodic oxide layer and the cathode through a mechanical separator -paper. The A785 winding is impregnated with liquid electrolyte that translates to the self-healing features of the capacitor. Thanks to its mechanical robustness, the A785 is suitable for use in mobile and automotive installations with operation up to +150°C.

Applications

KEMET's A785 is a series of high-performance surface mount hybrid capacitors. Due to its mechanical robustness, the A785 is suitable for use in mobile and automotive installations with extremely high demands and operation up to +150°C.

Benefits

- Surface mount form factor
- High ripple current up to 3.8A_{rms} @ 135°C
- High temperature; 150°C up to 1,000 hours
- Low leakage current (Typically no re-ageing required)
- High vibration resistance up to 30g
- Self-healing behaviours
- Outstanding electrical performance
- AEC-Q200 compliance
- RoHS compliant
- Halogen-Free

Standard

Anti-Vibration

© KEMET Electronics Corporation • One East Broward Boulevard
Fort Lauderdale, FL 33301 USA • 954-766-2800 • www.kemet.com

Part Number System

A	785	MW	187	M	1J	LA	V	013
Capacitor Class	Series	Size Code	Capacitance Code (pF)	Tolerance	Rated Voltage (VDC)	Packaging	Electrical Parameters	ESR
A = Aluminum	Surface Mount Hybrid Polymer Aluminum Capacitors 150 °C 1,000 hours	See Dimension Table	First two digits represent significant figures for capacitance values. Last digit specifies the number of zeros to be added.	M = ±20%	25 = 1E 35 = 1V 50 = 1H 63 = 1J	LA = Tape & Reel	S = Automotive V = Automotive +Anti-Vibration	Last 3 digits represent significant figures for ESR values. (mΩ)

Ordering Options Table

Packaging Type	Packaging Code
Standard Packaging Options	
Tape & Reel	LA
Contact KEMET for other Lead and Packaging options	

Dimensions – Millimeters

Standard

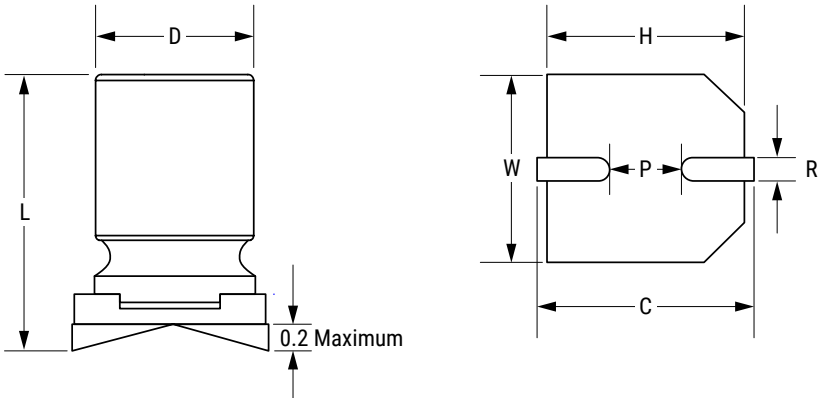

Anti-Vibration

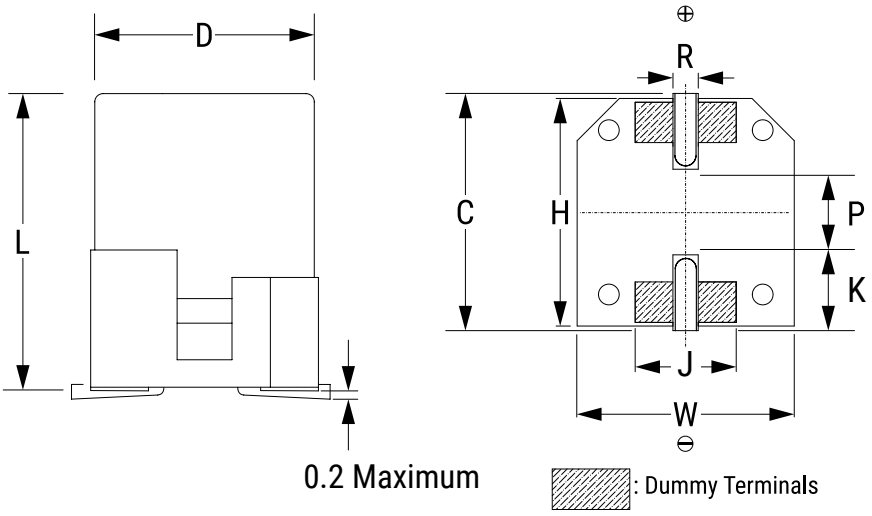

Size Code	D		L		W		H		C		R	P	J	K
	Nominal	Tolerance	Nominal	Tolerance	Nominal	Tolerance	Nominal	Tolerance	Nominal	Tolerance	Range	Nominal	Nominal	Nominal
KN	8.0	±0.5	9.7	±0.3	8.3	±0.2	8.3	±0.2	9.0	±0.2	0.8 – 1.1	3.1	-	-
KS	8.0	±0.5	12.2	±0.3	8.3	±0.2	8.3	±0.2	9.0	±0.2	0.8 – 1.1	3.1	-	-
MN	10.0	±0.5	10.2	±0.3	10.3	±0.2	10.3	±0.2	11.0	±0.2	0.8 – 1.1	4.6	-	-
MS	10.0	±0.5	12.2	±0.5	10.3	±0.2	10.3	±0.2	11.0	±0.2	0.8 – 1.1	4.6	-	-
MW	10.0	±0.5	16.5	±0.5	10.3	±0.2	10.3	±0.2	11.0	±0.2	0.8 – 1.1	4.6	-	-
MN (Anti-Vibration)	10.0	±0.5	10.4	±0.5	10.3	±0.2	10.8	±0.2	11.2	±0.2	0.7 – 1.1	4.6	4.4	3.2
MS (Anti-Vibration)	10.0	±0.5	12.4	±0.5	10.3	±0.2	10.8	±0.2	11.2	±0.2	0.7 – 1.1	4.6	4.4	3.2
MW (Anti-Vibration)	10.0	±0.5	16.7	±0.5	10.3	±0.2	10.8	±0.2	11.2	±0.2	0.7 – 1.1	4.6	4.4	3.2

Environmental Compliance

All Part Numbers in this datasheet are Reach and RoHS compliant and Halogen-Free.

As an environmentally conscious company, KEMET is working continuously with improvements concerning the environmental effects of both our capacitors and their production. In Europe (RoHS Directive) and in some other geographical areas like China, legislation has been put in place to prevent the use of some hazardous materials, such as lead (Pb), in electronic equipment. All products in this catalogue are produced to help our customers' obligations to guarantee their products and fulfil these legislative requirements. The only material of concern in our products has been lead (Pb), which has been removed from all designs to fulfil the requirement of containing less than 0.1% of lead in any homogeneous material. KEMET will closely follow any changes in legislation worldwide and makes any necessary changes in its products, whenever needed. Some customer segments such as medical, military and automotive electronics may still require the use of lead in electrode coatings. To clarify the situation and distinguish products from each other, a special symbol is used on the packaging labels for RoHS compatible capacitors.

Due to customer requirements, there may appear additional markings such as LF = Lead-free or LFW = Lead-free wires on the label.

Performance Characteristics

Item	Performance Characteristics
Capacitance Range	47 – 820 µF
Rated Voltage	25 – 63 VDC
Operating Temperature	-55°C to +150°C
Capacitance Tolerance	±20% at 120 Hz/20°C
Life Test	1,000 hours at rated temperature (See conditions in Test Method and Performance)
Leakage Current	I = 0.01 CV
	C = Rated capacitance (µF), V = Rated voltage (VDC), Voltage applied for 2 minutes at 20°C.

Compensation Factor of Ripple Current (RC) vs. Frequency

Frequecy correction factor for permissible ripple current should be calculated following $I_{AC, f}$ / $I_{AC, 100\ kHz}$:

Rated Voltage (VDC)	Frequency	100Hz	200Hz	500Hz	1kHz	5kHz	10kHZ	50kHz	100kHz
25 & 35	Coefficient	0.40	0.50	0.60	0.67	0.79	0.84	0.97	1.00
50 & 63		0.22	0.31	0.42	0.55	0.75	0.82	0.94	1.00

Test Method & Performance

Conditions	Endurance Life Test	High Temperature Storage Test
Temperature	+150°C	+150°C
Test Duration	1,000 hours	1,000 hours
Ripple Current	Rated ripple applied	No ripple current applied
Voltage	Rated voltage	No voltage applied
Performance	**The following specifications will be satisfied when the capacitor is restored to 20°C.**	
Capacitance Change	Within ±30% of the initial value	
Dissipation Factor	Does not exceed 200% of the specified value	
ESR	Does not exceed 200% of the specified value	
Leakage Current	Does not exceed the specified value	Does not exceed the specified value after Voltage treatment (Re-age procedure)
Damp Heat	**The following specifications will be satisfied when the capacitor is restored to 20°C after application of rated voltage for 2,000 hours at 85°C, 85% RH.**	
Capacitance Change	Within ±20% of the initial value	
Dissipation Factor	Does not exceed 200% of the specified value	
ESR	Does not exceed 200% of the specified value	
Leakage Current	Does not exceed the specified value	
Surge Voltage (Rated Voltage x 1.15(V))	**The following specifications will be satisfied when the capacitor is subjected to 1,000 cycles, each consisting of charge with the surge voltages specified at 150°C for 30 seconds through a protective resistor (Rc = 1 kΩ) and discharge for 5 minutes, 30 seconds.**	
Capacitance Change	Within ±20% of the initial value	
Dissipation Factor	Does not exceed 150% of the specified value	
ESR	Does not exceed 150% of the specified value	
Leakage Current	Does not exceed the specified value	
Resistance to Soldering Heat	**Measurement for solder temperature profile at capacitor top and terminal.**	
Capacitance Change	Within ±10% of the initial value	
Dissipation Factor	Does not exceed 150% of the specified value	
ESR	Does not exceed 150% of the specified value	
Leakage Current	Does not exceed the specified value	

Test Method & Performance – Anti-Vibration Version

Anti-Vibration Version	
Vibration Test Specifications	1.5 mm displacement amplitude or 30 g maximum acceleration. Vibration applied for three 4-hour sessions at 10 – 2,000 Hz (capacitor on PCB).
Capacitance Change	Within ±20% of the initial value
Dissipation Factor	Does not exceed 150% of the specified value
ESR	Does not exceed 150% of the specified value
Leakage Current	Does not exceed the specified value

Shelf Life & Re-Ageing

Shelf Life
Solderability is 12 months after manufacturing date.

The capacitance, ESR and impedance of a capacitor will not change significantly after extended storage periods, however the leakage current will slowly increase.

- The suitable storage condition is +5 to +35°C and less than 75% in relative humidity.
- Do not store in damp conditions such as water, saltwater spray or oil spray.
- Do not store in an environment containing gases such as hydrogen sulphide, sulphurous acid gas, nitrous acid, chlorine gas, ammonium, etc.
- Do not store under exposure to ozone, ultraviolet rays or radiation.

If a capacitor has been stored for more than 12 months under these conditions and it shows increased leakage current, then a treatment by voltage application is recommended.

MSL 1 rating according to IPC/JEDEC-J-STD-020.

Re-age Procedure
Apply the rated DC voltage to the capacitor at 125°C for a period of 120 minutes through a 1 kΩ series resistor.

Table 1 – Ratings & Part Number Reference

Rated Voltage	Surge Voltage	Rated Capacitance	ESR	Dissipation Factor	Ripple Current[1]	Ripple Current[2]	Leakage Current	Case Size	KEMET Part Number		Case Size
(VDC)	(VDC)	120 Hz 20°C (µF)	100 kHz 20°C (mΩ)	120 Hz 20°C	100 kHz 135°C (mA)	100 kHz 150°C (mA)	20°C 2 min (µA)	D x L (mm) Std. Version	Standard Version	Anti-Vibration Version	D x L (mm) Anti-Vibration
25	28.75	220	29	14	1600	800	55	8x9.7	A785KN227M1ELAS029		
25	28.75	330	27	14	1800	900	82.5	8x12.2	A785KS337M1ELAS027		
25	28.75	390	20	14	2000	1500	97.5	10x10.2	A785MN397M1ELAS020	A785MN397M1ELAV020	10x10.4
25	28.75	560	17	14	2200	1700	140	10x12.2	A785MS567M1ELAS017	A785MS567M1ELAV017	10x12.4
25	28.75	820	15	14	2700	1800	205	10x16.5	A785MW827M1ELAS015	A785MW827M1ELAV015	10x16.7
35	40.25	120	35	12	1500	1000	42	8x9.7	A785KN127M1VLAS035		
35	40.25	180	32	12	1600	1200	63	8x12.2	A785KS187M1VLAS032		
35	40.25	220	23	12	1900	1300	77	10x10.2	A785MN227M1VLAS023	A785MN227M1VLAV023	10x10.4
35	40.25	270	20	12	2200	1600	94.5	10x12.2	A785MS277M1VLAS020	A785MS277M1VLAV020	10x12.4
35	40.25	470	15	12	2600	1800	164.5	10x16.5	A785MW477M1VLAS015	A785MW477M1VLAV015	10x16.7
50	57.5	68	40	10	1800	1200	34	8x9.7	A785KN686M1HLAS040		
50	57.5	82	36	10	2100	1300	41	8x12.2	A785KS826M1HLAS036		
50	57.5	120	28	10	2300	1500	60	10x10.2	A785MN127M1HLAS028	A785MN127M1HLAV028	10x10.4
50	57.5	150	26	10	2700	1700	75	10x12.2	A785MS157M1HLAS026	A785MS157M1HLAV026	10x12.4
50	57.5	220	15	10	3600	2300	110	10x16.5	A785MW227M1HLAS015	A785MW227M1HLAV015	10x16.7
63	72.45	47	45	8	1700	1100	29.6	8x9.7	A785KN476M1JLAS045		
63	72.45	68	40	8	1900	1200	42.8	8x12.2	A785KS686M1JLAS040		
63	72.45	82	30	8	2200	1400	51.7	10x10.2	A785MN826M1JLAS030	A785MN826M1JLAV030	10x10.4
63	72.45	120	28	8	2600	1600	75.6	10x12.2	A785MS127M1JLAS028	A785MS127M1JLAV028	10x12.4
63	72.45	150	13	8	3800	2200	94.5	10x16.5	A785MW157M1JLAS013	A785MW157M1JLAV013	10x16.7
63	72.45	180	13	8	3800	2200	113.4	10x16.5	A785MW187M1JLAS013	A785MW187M1JLAV013	10x16.7

1 Capacitor mounted on PCB, Lop: 4,000 hours
2 Capacitor mounted on PCB, Lop: 1,000 hours

Installing

Hybrid Polymer Aluminum Capacitors are prone to a change in leakage current due to thermal stress during soldering. The leakage current may increase after soldering or reflow soldering. Therefore, verify the suitability for use in circuits sensitive to leakage current. Depending on the nature of the circuit, it may be recommended to follow the re-aging procedure before application.

A general principle is that lower temperature operation results in a longer, useful life of the capacitor. For this reason, it should be ensured that Hybrid Polymer Aluminum capacitors are placed away from heat-emitting components. Adequate space should be allowed between components for cooling air to circulate, especially when high ripple current loads are applied. In any case, the maximum rated temperature must not be exceeded.

- Do not deform the case of capacitors or use capacitors with a deformed case.
- Verify that the connections of the capacitors are able to insert on the board without excessive mechanical force. Excessive force during insertion, as well as after soldering may cause terminal damage and affect the electrical performance.
- Ensure electrical insulation between the capacitor case, negative terminal, positive terminal and PCB.
- If the capacitors require mounting through additional means, the recommended mounting accessories shall be used.
- Verify the correct polarization of the capacitor on the board.

KEMET recommends, to ensure that the voltage across each capacitor does not exceed its rated voltage.

Electrical Parameters across Frequency Range

A785MN397M1ELAS020

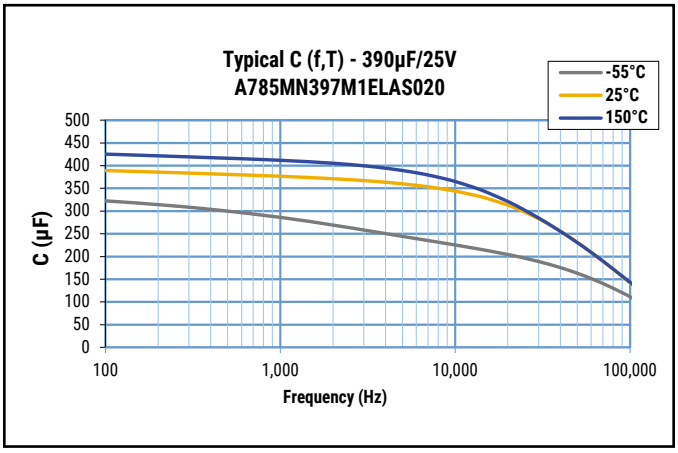

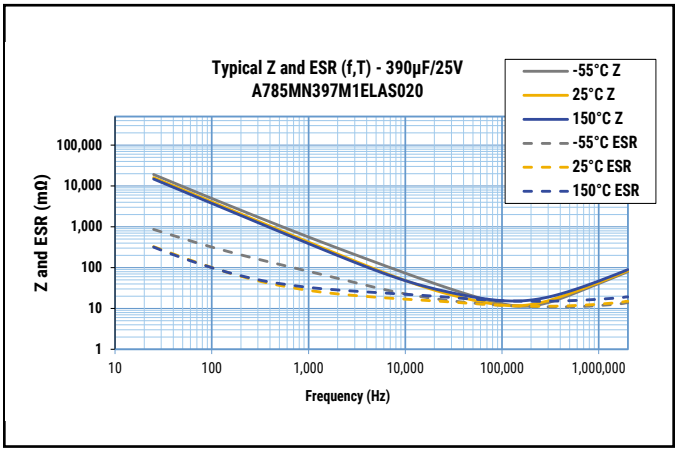

A785MW187M1JLAS013

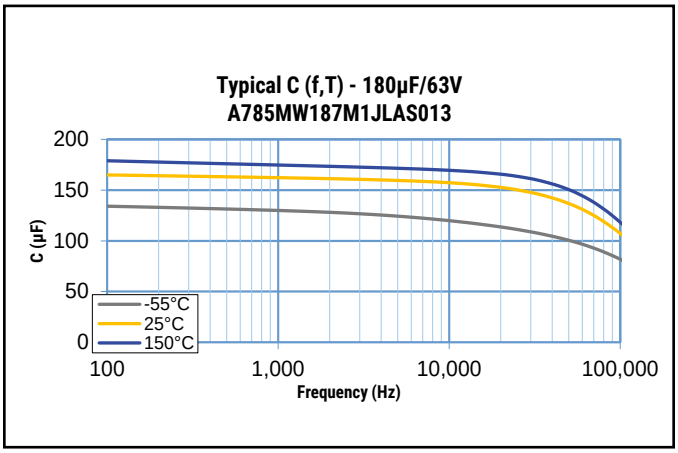

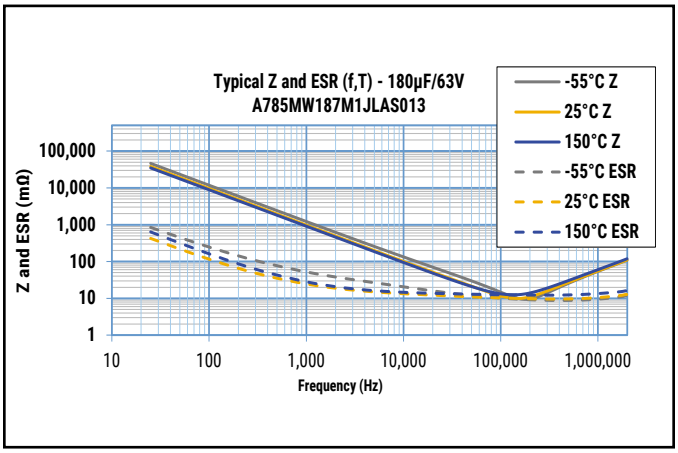

Operational Life

Typical capacitance and ESR curves of Polymer Hybrid V-Chip mounted on a standard Printed Circuit Board (PCB) at rated temperature T_R and with rated ripple current I_{RAC} applied:

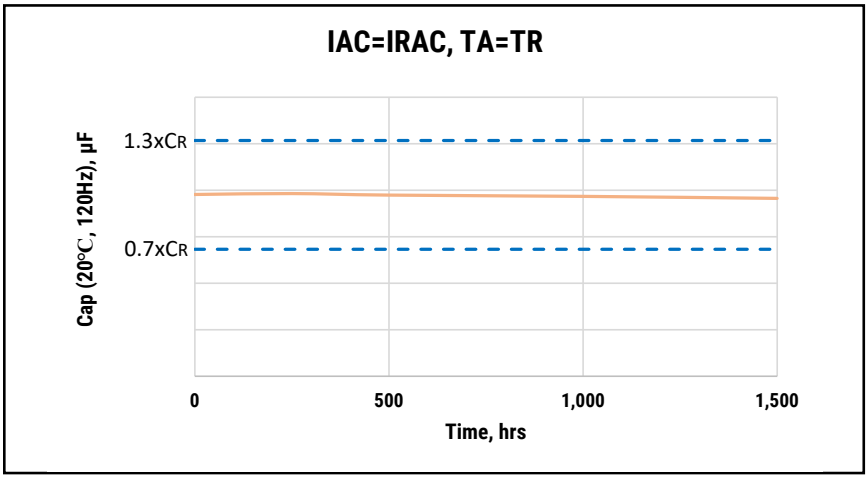

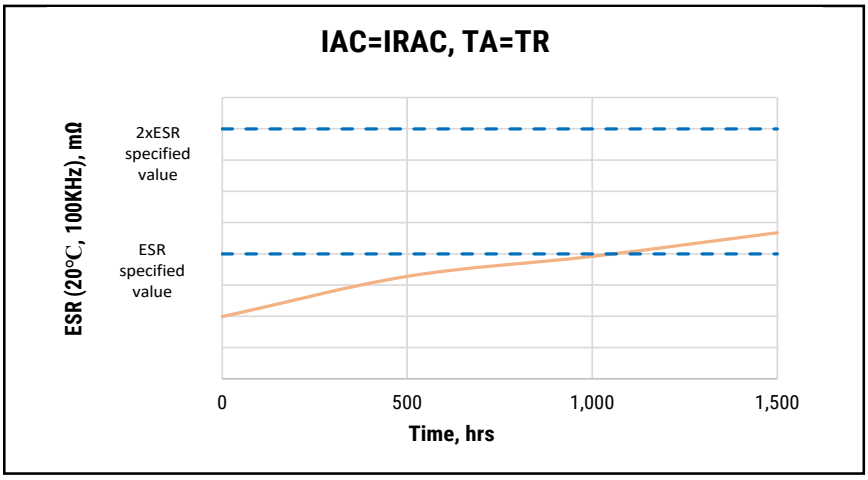

DC Life Formula

Expected DC operational life (L_{Op}, in k hour) can be calculated in accordance to the following equations depending on part number rated voltage (VDC) and ambient temperature (T_A):

For VDC= [25V;35V] ⟶ $L_{Op}=16{,}550\times10^{((125-TA)/32)}$
For VDC= [50V;63V] and T_A= [70°C;130°C] ⟶ $L_{Op}=16{,}550\times10^{((125-TA)/32)}$
For VDC= [50V;63V] and T_A=]130°C;155°C] ⟶ $L_{Op}=14{,}500\times10^{((125-TA)/42)}$

Where:

L_{Op}: Life at maximum permissible operating temperature with rated operating voltage applied (k hour). Maximum L_{Op}=200 kh.

T_A: Ambient operating temperature (°C).

Operational Life

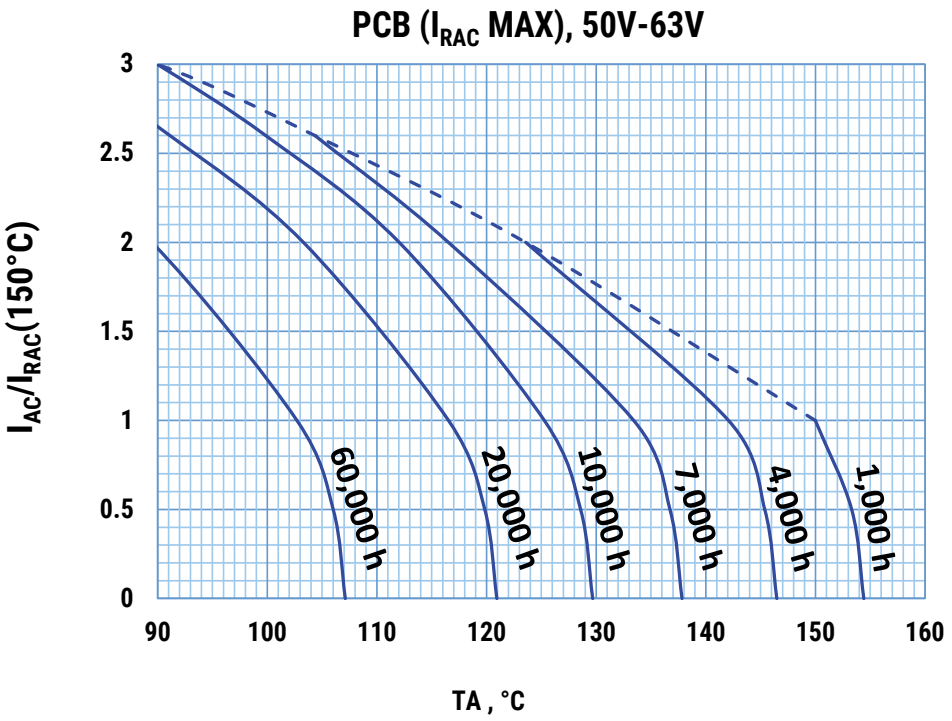

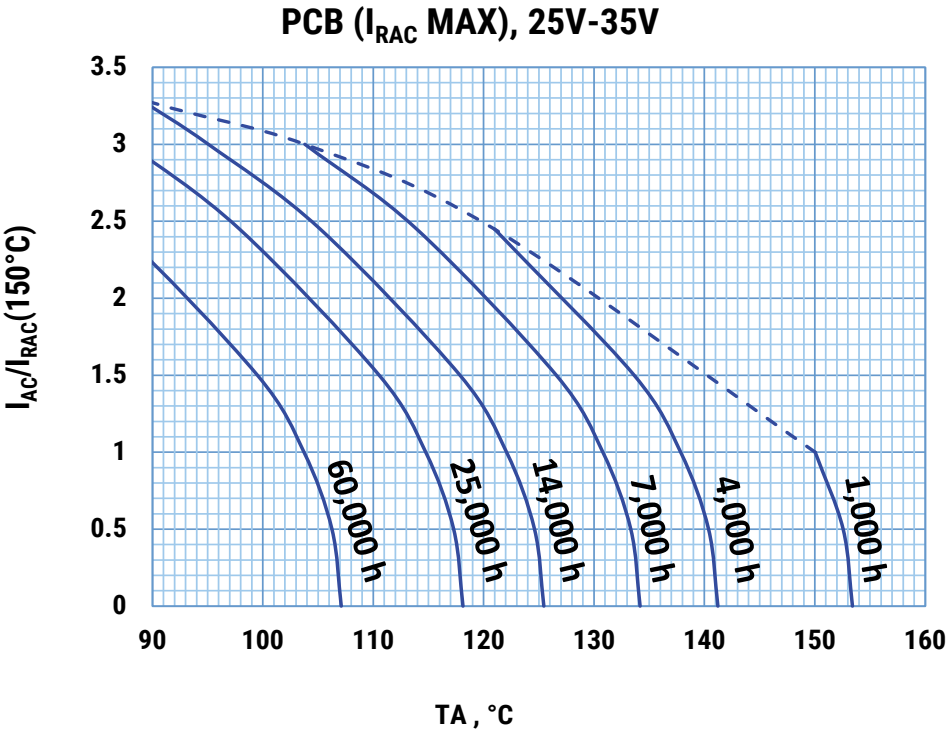

Landing Pad – Millimeters

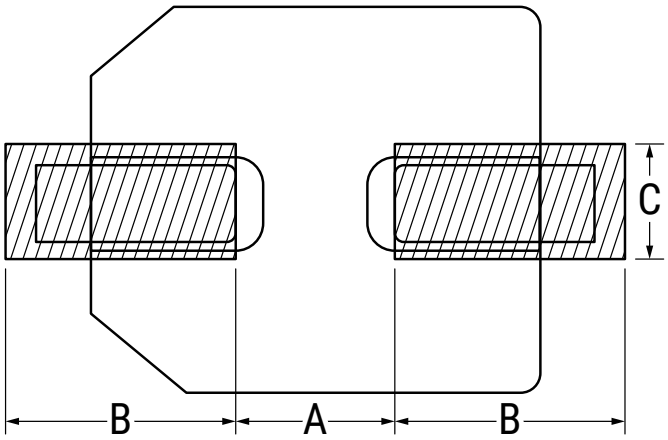

Diameter	A	B	C
8	3.1	4.2	2.2
10	4.5	4.4	2.2
10 (Anti-Vibration)	4.5	4.4	4.6
Units in mm			

Marking

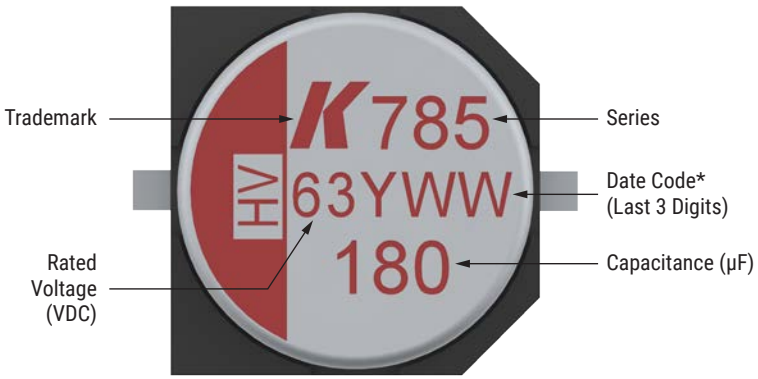

Date Code*	
1st Digits = Rated Voltage	
Letter = Year Code	W= 2023
Final Digits = Week of the Year	01 = 1st week of the Year to 52 = 52nd week of the Year
Year Code	
W	2023
X	2024
Y	2025
Z	2026
A	2027
B	2028
C	2029

Construction

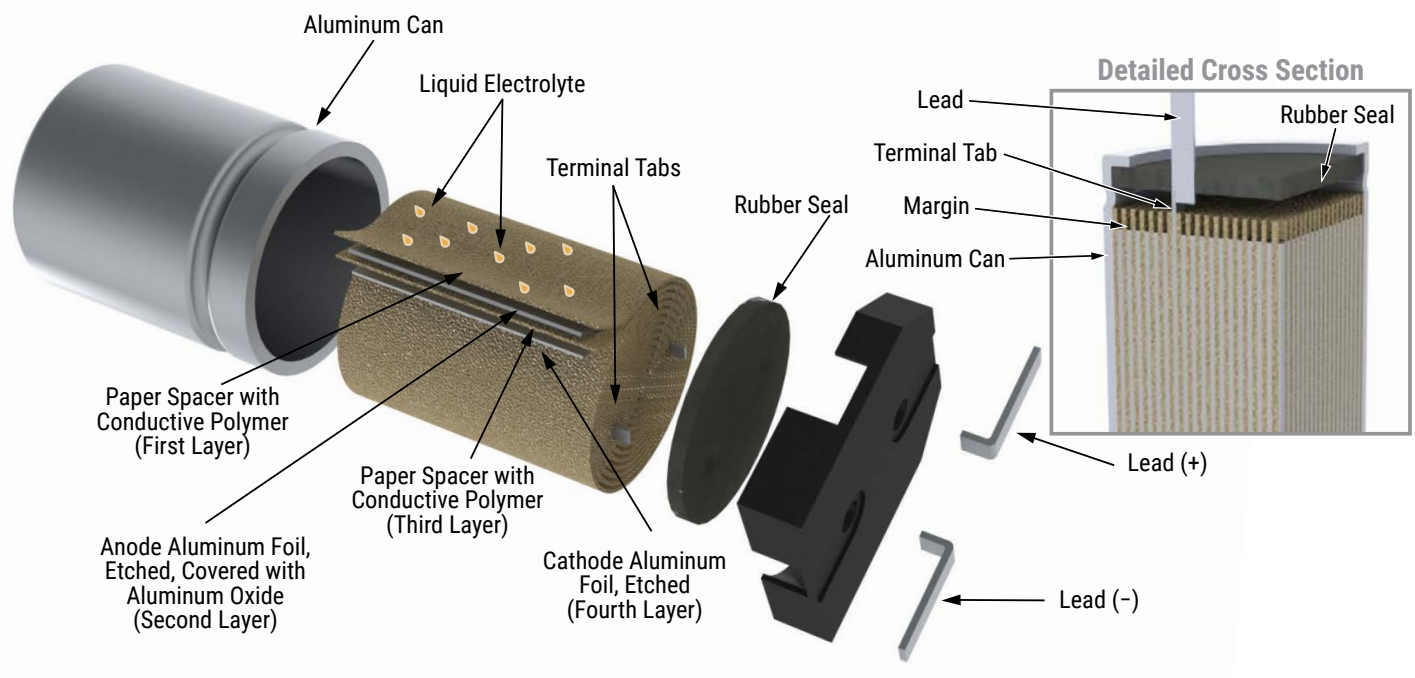

Re-Flow Soldering

The soldering conditions should be within the specified conditions below:

- Do not dip the capacitors body into the melted solder.
- Flux should only be applied to the capacitors terminals.
- Vapour heat transfer systems are not recommended. The system should be thermal, such as infra-red radiation or hot blast.
- Observe the soldering conditions as shown below.
- Do not exceed these limits and avoid repeated reflowing.

Time Period	Preheating t_s	t_L	t_d	t_p	Reflow Number
Temperature (°C)	150 – 180	≥ 217	≥ 230	260	1
				250	1 or 2
Time (seconds)	60 – 120	≤ 50	≤ 40	≤ 5	-

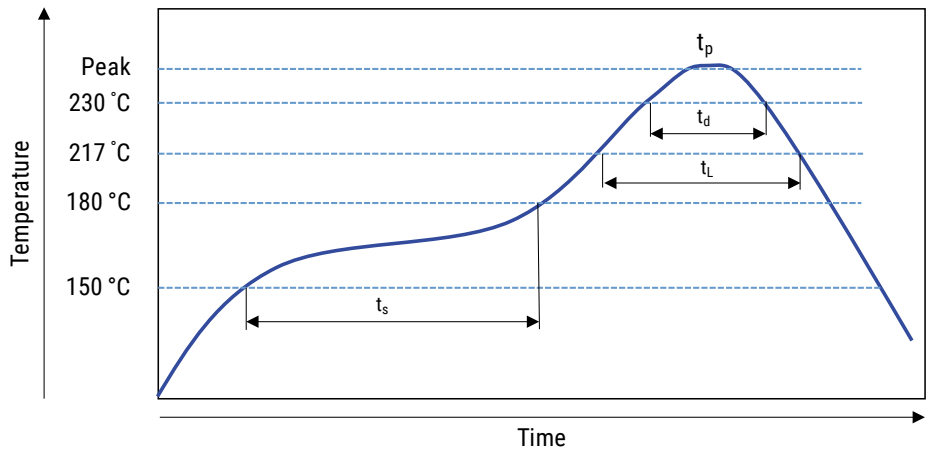

Lead Taping & Packaging

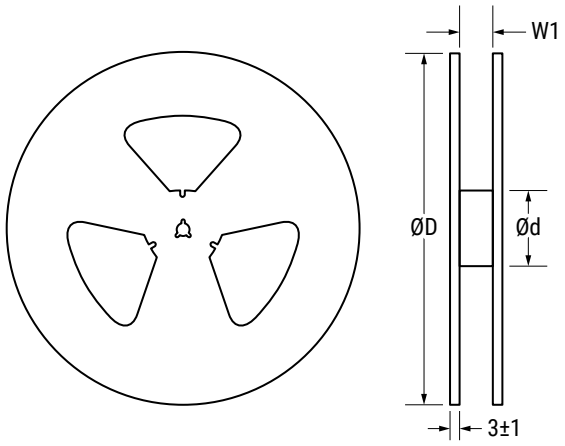

Size Code	Diameter (mm)	Length (mm)	Reel			Reel Quantity	Box Quantity
			d (mm)	D (mm)	W1 (mm)		
			±3	±2	±2		
KN	8	9.7	100	380	24	500	3,000
KS	8	12.2	100	380	24	400	2,400
MN	10	10.2	100	380	24	500	3,000
MS	10	12.2	100	380	24	400	2,400
MW	10	16.5	100	380	24	250	1,500
MN (Anti-Vibration)	10	10.4	100	380	24	500	3,000
MS (Anti-Vibration)	10	12.4	100	380	24	400	2,400
MW (Anti-Vibration)	10	16.7	100	380	24	250	1,500

Taping for Automatic Insertion Machines

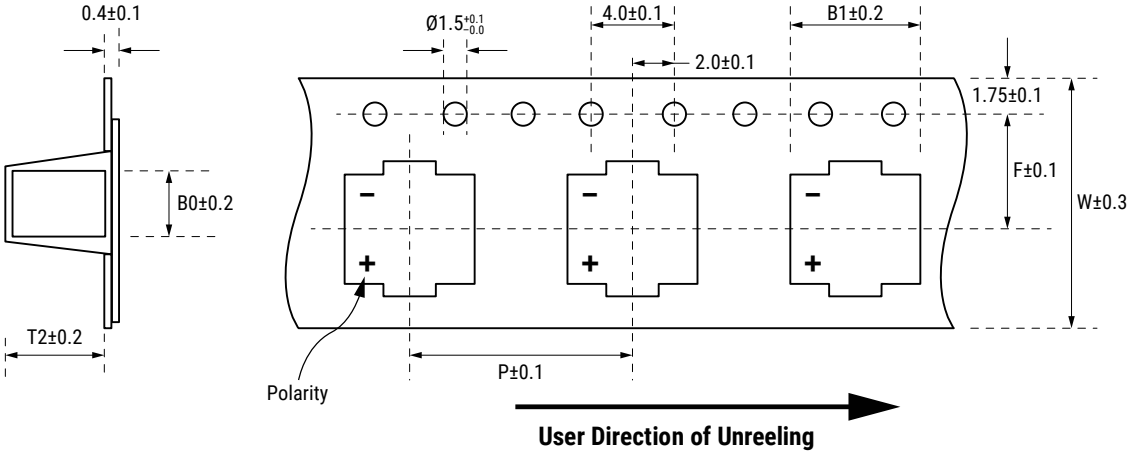

Size Code	D x L	W	P	F	B1	B0	T2
	Tolerance	±0.3	±0.1	±0.1	±0.2	±0.2	±0.2
KN	8 x 9.7	24	16	11.5	8.7	8.7	9.8
KS	8 x 12.2	24	16	11.5	8.7	8.7	12.6
MN	10 x 10.2	24	16	11.5	10.7	10.7	10.1
MS	10 x 12.2	24	16	11.5	10.7	10.7	12.5
MW	10 x 16.5	24	20	11.5	10.7	11.2	16.9
MN (Anti-Vibration)	10 x 10.4	24	16	11.5	10.7	11.2	10.3
MS (Anti-Vibration)	10 x 12.4	24	16	11.5	10.7	11.2	12.7
MW (Anti-Vibration)	10 x 16.7	24	20	11.5	10.7	11.2	16.9

Construction Data

The manufacturing process begins with the anode foil being electrochemically etched to increase the surface area and then 'formed' to produce the aluminum oxide layer. Both the anode and cathode foils are then interleaved with absorbent paper and wound into a cylinder. During the winding process, aluminum tabs are attached to each foil to provide the electrical contact.

The deck, complete with terminals, is attached to the tabs and then folded down to rest on top of the winding. The complete winding is impregnated with a conductive polymer electrolyte before being housed in a suitable container, usually an aluminum can, and sealed. Throughout the process, all materials inside the housing must be maintained at the highest purity and be compatible with the electrolyte.

Each capacitor is aged and tested before being packed. The purpose of aging is to repair any damage in the oxide layer and thus reduce the leakage current to a very low level. Aging is normally carried out at the rated temperature of the capacitor and is accomplished by applying voltage to the device while carefully controlling the supply current. The process may take several hours to complete. Damage to the oxide layer can occur due to a variety of reasons:

- Slitting of the anode foil after forming
- Attaching the tabs to the anode foil
- Minor mechanical damage caused during winding

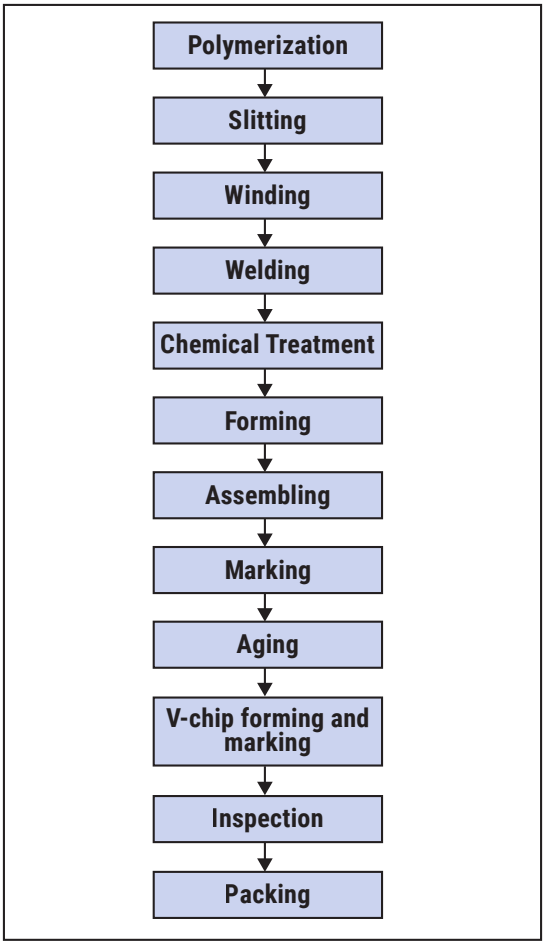

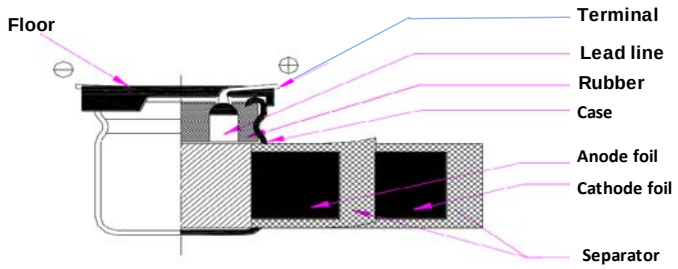

Product Safety

THESE NOTES SHOULD BE READ IN CONJUNCTION WITH THE PRODUCT DATA SHEET. FAILURE TO OBSERVE THE RATINGS AND THE INFORMATION ON THIS SHEET MAY RESULT IN A SAFETY HAZARD.

Warning

When potential lethal voltages e.g. 30 VAC (RMS) or 60 VDC are applied to the terminals of this product, the use of a hazard warning label is recommended.

1. Electrolyte

Hybrid aluminum polymer electrolytic capacitors contain polymer and electrolyte, which can be hazardous.

1.1 Safety Precautions

In the event of gas venting, avoid contact and inhalation. Wash the affected area with hot water. Use rubber gloves to avoid skin contact. Any contact with the eyes should be liberally irrigated with water and medical advice sought.

2. Intrinsic Properties

2.1 Operating

DC capacitors are polar devices and will operate safely only if correctly connected. Reversing the connections will result in high leakage currents which could subsequently cause short circuit failure and possibly explosion and fire. Correctly polarized operation may result in the above failure modes if:

- The surge voltage is exceeded
- The ambient temperature is too high
- Excessive ripple currents are applied

2.2 Non-Operating

Excessive torque or soldering heat may affect the performance of the capacitor or damage the sealing. Electric shock may result if capacitors are not discharged.

3. Disposal

Aluminum electrolytic capacitors are consignable waste under the Special Waste Regulations 1996 (Statutory Instrument 1996 No 972), which complies with the EC Hazardous Waste Directive – Directive 91/689/EEC. The electrolyte should therefore be treated as a hazardous waste and advice should be sought from the local office of the Environmental Agency regarding its disposal.

Due to the construction of an aluminum electrolytic capacitors, high temperature incineration may cause the component to explode due to build-up of internal pressure. In addition, incineration may also cause the emission of noxious fumes. KEMET strongly recommends that if there are any doubts regarding the disposal of conductive polymer aluminum solid electrolytic capacitors, that advice be sought from the local regulating authority.

In addition, KEMET would like to request that users of aluminum electrolytic capacitors respect the needs of the environment and, wherever possible, recover as much of the materials as possible, i.e., aluminum.

Product Safety cont.

4. Unsafe Use
Most failures are of a passive nature and do not represent a safety hazard. A hazard may, however, arise if this failure causes a dangerous malfunction of the equipment in which the capacitor is employed. Circuits should be designed to fail safe under the normal modes of failure.

The usual failure mode is an increase of ESR or an open circuit. Other possible modes are decrease of capacitance, increase in dissipation factor (and impedance) or an open circuit. Capacitors should be used in a well-ventilated enclosure or cabinet.

5. Mounting
Care should be taken when mounting, that any safety vent in the can is not covered.

6. Fumigation
In many countries throughout the world it is now common practice to fumigate shipments of products in order to control insect infestation, particularly when wooden packaging is used. Currently, methyl bromide is widely used as a fumigant, which can penetrate cardboard packing and polymer bags and, therefore, come into direct contact with equipment or components contained within.

If aluminum electrolytic capacitors become exposed to methyl bromide then corrosion may occur, depending upon the concentration and exposure time to the chemical.

This failure mode can affect all types of KEMET aluminum electrolytic capacitors. Methyl bromide can penetrate the seals of aluminum electrolytic capacitors and cause internal corrosion of the anode connection, resulting in the component becoming open circuit. The rate of corrosion will depend upon the level of exposure to methyl bromide as well as the subsequent operating conditions, such as voltage and temperature. It may take months or, in some cases, several years before the component becomes open circuit.

7. Dielectric Absorption
A phenomenon known as dielectric absorption can cause aluminum electrolytic capacitors to recharge themselves. The phenomenon is well known but impossible to predict with any great accuracy, so potentially any electrolytic product could be affected. Thus, a capacitor that has been charged and then completely discharged will appear to recharge itself if left open circuit; this will manifest itself as a small voltage across the terminals of the capacitor. Generally, the voltages seen are less than 20 VDC. However, higher voltages have on occasion been reported.

In order to avoid any problems caused by this voltage, KEMET recommends that capacitors be discharged before connecting to the terminals.

KEMET Electronics Corporation Sales Offices

For a complete list of our global sales offices, please visit www.kemet.com/sales.

Disclaimer

YAGEO Corporation and its affiliates do not recommend the use of commercial or automotive grade products for high reliability applications or manned space flight.

All product specifications, statements, information and data (collectively, the "Information") in this datasheet are subject to change. The customer is responsible for checking and verifying the extent to which the Information contained in this publication is applicable to an order at the time the order is placed. All Information given herein is believed to be accurate and reliable, but it is presented without guarantee, warranty, or responsibility of any kind, expressed or implied.

Statements of suitability for certain applications are based on KEMET Electronics Corporation's ("KEMET") knowledge of typical operating conditions for such applications, but are not intended to constitute – and KEMET specifically disclaims – any warranty concerning suitability for a specific customer application or use. The Information is intended for use only by customers who have the requisite experience and capability to determine the correct products for their application. Any technical advice inferred from this Information or otherwise provided by KEMET with reference to the use of KEMET's products is given gratis, and KEMET assumes no obligation or liability for the advice given or results obtained.

Although KEMET designs and manufactures its products to the most stringent quality and safety standards, given the current state of the art, isolated component failures may still occur. Accordingly, customer applications which require a high degree of reliability or safety should employ suitable designs or other safeguards (such as installation of protective circuitry or redundancies) in order to ensure that the failure of an electrical component does not result in a risk of personal injury or property damage.

Although all product–related warnings, cautions and notes must be observed, the customer should not assume that all safety measures are indicated or that other measures may not be required.

KEMET requires its products to be packaged and shipped on pallets. This is because KEMET's products are specifically designed to be packed onto pallets during shipment. If for any reason, the products are removed from pallets by the shipping party and shipped to the end customer, then additional external protection is required. In this instance, an external box with two carton layers and an upwards orientation sticker must be used by the shipping party, with the empty space filled with filling material, and afterwards sealing the box. If this packing and packaging guideline is not followed by the shipping party, the shipping party, and not KEMET, will be held responsible for any packaging, packing and/or product damages upon delivery of the products to the end customer. KEMET hereby disclaims any liability for damages to the products or otherwise that have been, or threaten to be, inflicted, result from or are in any way related to the packaging, packing or damage by the shipping party in contravention of the packing and packaging guidelines herein.

KEMET is a registered trademark of KEMET Electronics Corporation.